AUTOMATION FOR BARRIERS

3, 4, 6 m

WITH A 230 Vac MOTOR

Motor power supply	230 Vac
Modular structure	Anodized aluminium "anticorodal" epoxide powder painted
Duty cycle	70 %
Warning lights	incorporated

EL
CARDIN

GUARANTEE

EL313C/413C/613

A range of road barriers, consolidated and optimised throughout time, which features a vast array of models built from hard wearing and highly reliable materials and uses state of the art technology.

The cabinet in cast aluminium, housing the mechanical parts, is made up of modular components which are highly resistant to atmospheric agents and are easy to replace in case of accidental damage. All the inspection ports giving access to the internal components are lockable and are fitted with security microswitches. The flip-back top cover is made of shockproof materials and is fitted with incorporated warning lights. The aesthetical solutions used give the product a slim and modern look which is easily integrated into all architectural contexts. Absolute mechanical reliability, silent running and regular movement are guaranteed in all products.

USE

Electromechanical barriers for the access control of parking lots, apartment blocks, company grounds etc. The various models allow all types of installation on passageways of up to 3, 4 and 6 meters with differential speed. The centralised movement of the boom makes the barrier perfectly symmetrical and allows it to be installed both to the left and to the right of the passageway. The vast range of accessories simplifies their installation time.

The appliances are fitted with "anti-tamper systems" protecting their internal mechanisms. When tampered with, the system releases the boom holder and boom parts from the drive mechanism therefore saving the entire machine from damage. The incorporated electronic programmer conforms to the local standards and regulations in force and is fitted with all the connections needed to carry out a complete automatic installation.

shock-proof cover | incorporated warning lights | aluminium structure | fold up mesh | articulated boom

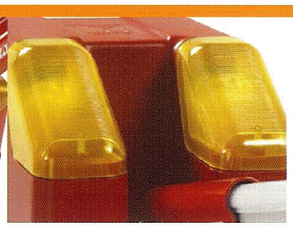

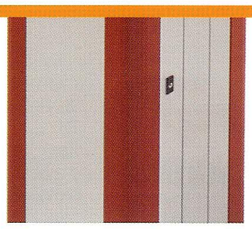

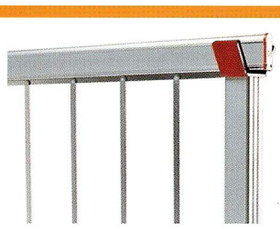

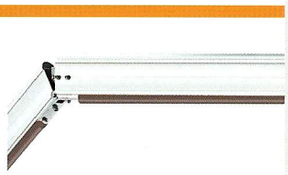

TECHNICAL SPECIFICATIONS

Model	Power supply	Electrical input	Power input	Duty cycle	Opening time (90°)	Torque	Maximum boom length	IP
	Vac	A	W	%	s	Nm	m	
EL313C	230	2,7	600	70	2	110	3	54
EL413C	230	2,7	600	70	4	200	4	54
EL613	230	2,7	600	70	10	400	6	54

VERSIONS

710/EL313C - 710/EL413C - 710/EL613

Automation for road barriers with 3 m, 4 m and 6 m booms and a 230 Vac motor, complete with flashing warning lights and on board electronics with automatic, semiautomatic and manual functions. The appliances are factory set for the insertion of a Cardin standard radio receiver card and for the connection of all the peripheral devices needed to carry out an automatic installation.

ACCESSORIES

716/EL320	3 m rigid aluminium booms for the EL313C with a rubber safety edge.
716/EL420	4 m rigid aluminium booms for the EL413C with a rubber safety edge.
716/EL601	6 m rigid aluminium booms for the EL613 with a rubber safety edge.
716/EL324ASK1	3 m articulated boom for EL313C, EL413C with a rubber safety edge. A special device inside the boom allows it to be bent backwards during opening.
716/ELFS1	Support fork in extruded aluminium.
716/ELSM	Mobile support pole.
716/ELSA	Retractile aluminium mesh for 6 metre booms (2 m strips).
716/ELLAMP	Warning light set (yellow lights).
716/ELSRE	Reflective tape in strips of 250 x 50 mm.
950/XLPBS1	Pressure switch for rubber safety edges.

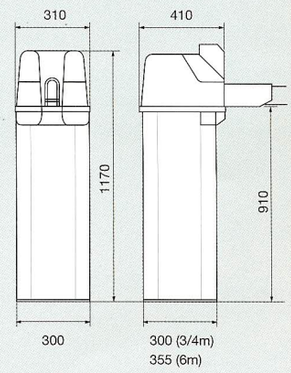

INSTALLATION EXAMPLE

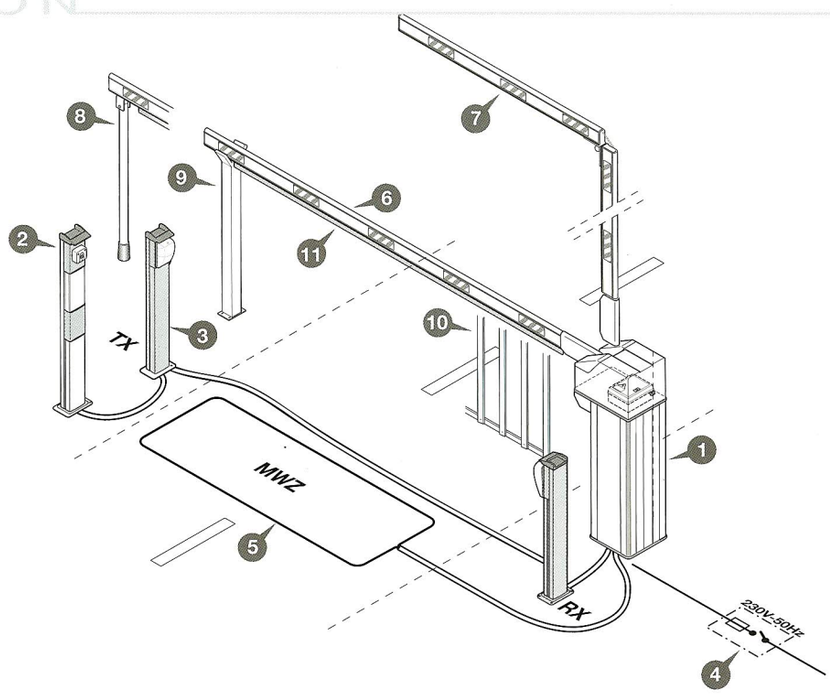

Legend

1 Barrier
2 Selector switch
3 Photocells
4 All pole circuit breaker with a min. of 3 mm between the contacts
5 Magnetic sensor
6 Standard boom
7 Articulated boom
8 Mobile support fork
9 Fixed support fork
10 Retractile mesh
11 Safety edge

Attention: The drawing is purely indicative and is supplied as working base from which to choose the Cardin electronic components making up the installation. This drawing therefore does not lay down any obligations regarding the execution of the installation.

DP0416 - 02.2010

CARDIN ELETTRONICA spa
Via Raffaello, 36 - 31020 San Vendemiano (TV) Italy
Tel: (+39) 0438 404011
Fax: (+39) 0438 401831
e-mail (Italy): sales.office.it@cardin.it
e-mail (Europe): sales.office@cardin.it
http: www.cardin.it

cardin creative electronics inside